Insight Autosampler

(AS-700)

Users' Guide

Eicom Corporation

2014

Contents

1. Introduction

We thank you for choosing Eicom. The Insight Autosampler (AS-700) features a two 96-well plate capacity, condensation free cooling, and pre-injection mixing. Please be sure to read and understand this users' guide before operating the Insight Autosampler. If you have unanswered questions after reading this guide, please contact Eicom directly.

We reserve the right to change the contents of this document with or without notice. The latest information can be found by contacting us directly or by visiting the Eicom website: www.eicom-usa.com.

Pictorials used in this manual

The following pictorials are used in this guide:

The danger sign warns about a hazard. It calls attention to a procedure or practice which, if not adhered to, could result in injury or loss of life.

The caution sign denotes a hazard. It calls attention to a procedure or practice which, if not adhered to, could result in damage or destruction of parts or all of the equipment. Do not precede beyond a cautions sign until the indicated conditions are fully understood and met.

The note sign signals additional information. It provides advice or a suggestion that may support you in using the equipment.

Safety practices

The following safety practices will ensure safe operation of the autosampler.

1. Replace blown fuses with the size and rating indicated on the fuse panel or holder as discussed in Section 5-5 of this manual.

   Replace or repair power chords with faulty or frayed insulation.

   Check actual line voltage to confirm it is the value for which this instrument is wired. Make sure power cords are plugged into the correct voltage sources.

2. Perform periodic leak checks on supply lines. Do not allow flammable and/or toxic solvents to accumulate. Follow a regulated, approved waste disposal program. Never dispose of such products through the municipal sewage system.

Removal of some panels exposes potentially dangerous voltages. Disconnect the instrument from all power sources before removing protective panels This action should only be performed by authorized personnel:

2. Instrument Overview

2-1. Packing List

	QTY
AS-700 configured with:	1
PEEK rotor seal and stator,	1
PEEK sample loop (100µL),	1
15 µL needle,	1
500 µL syringe	1
Power Cable	1
Serial Cable	1
Serial to USB adaptor, Keyspan	1
CD-ROM, Keyspan	1
I/O signal cable	1
Drain tube, silicon with T connector	2
CD-ROM, Alias Service Manager	1
96-well Microtiter plate (for use as adaptor for 96-well sample plate)	2
Users' Guide	1

2-2. Sample compartment

1. Grasp the door handle and pull it towards you until it is horizontal.

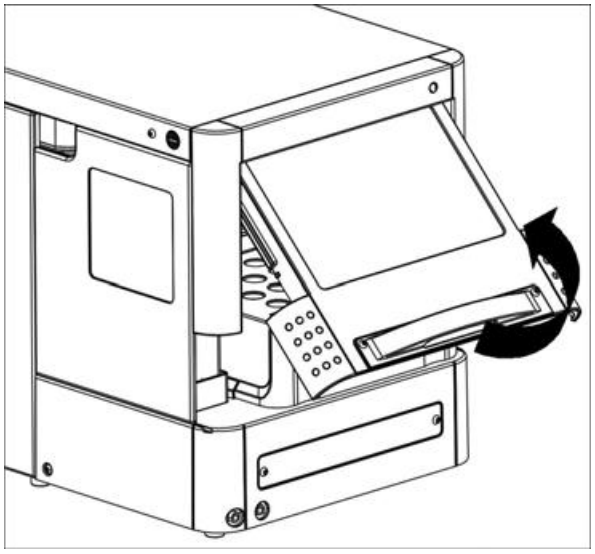

2. To stow the door, push the door into the autosampler.

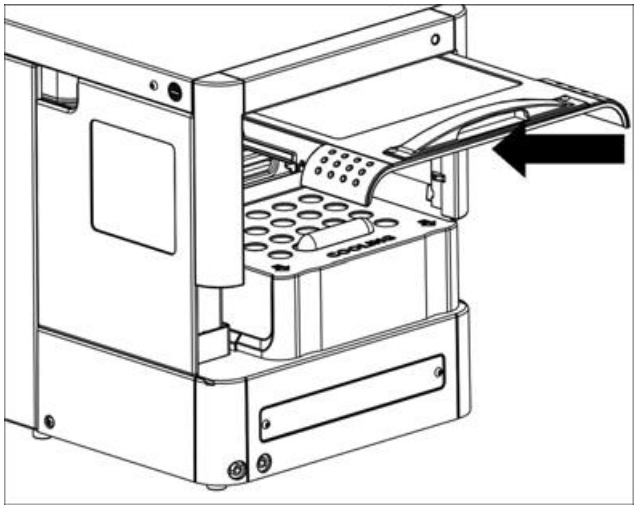

3. Remove the cooling cover by pulling it forward and set it aside.

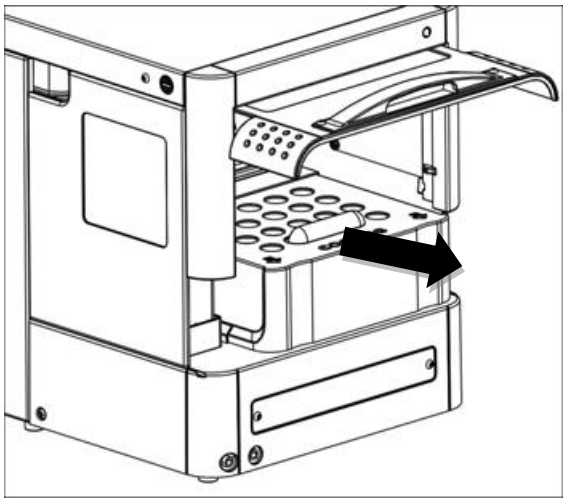

For easier access, you can remove the front shroud/door assembly.

1. Press the two black buttons on either side (top) of the autosampler simultaneously.
2. Gently pull the cover towards you.

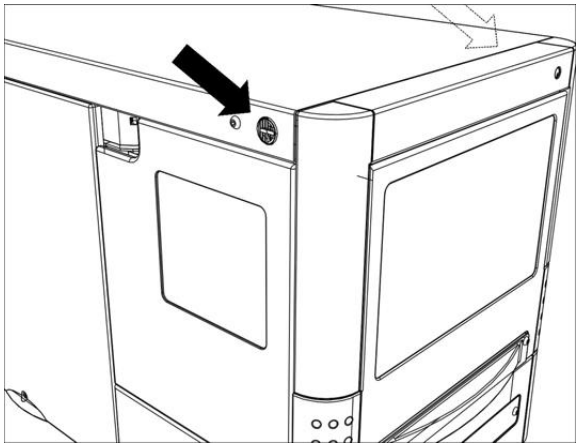

View of the Insight autosampler with shroud/door assembly removed.

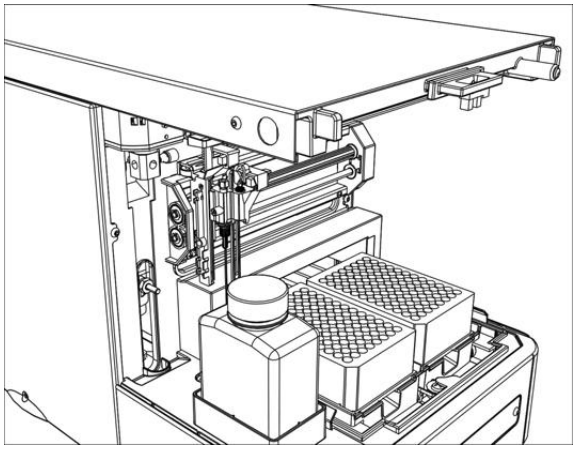

2-3. Parts Diagrams

Sampling compartment

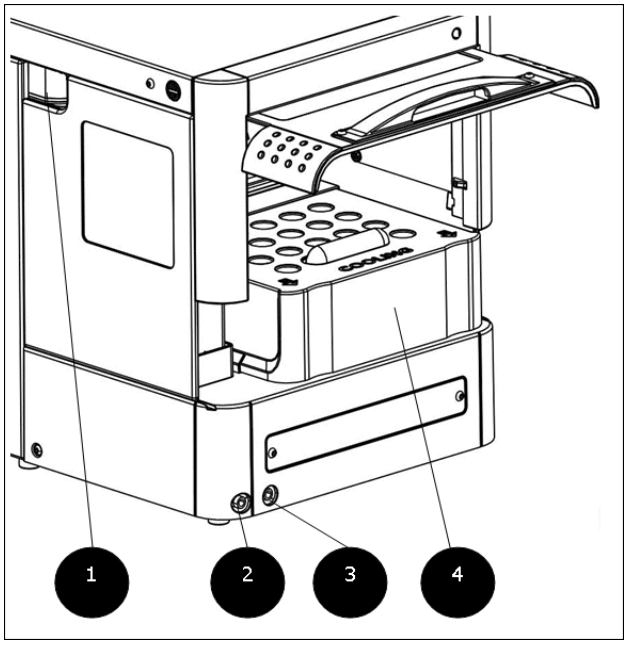

1 Tubing guide
2 Wash/waste drain
3 Condensed water/leakage drain
4 Cooling cover

Insight autosampler – front view

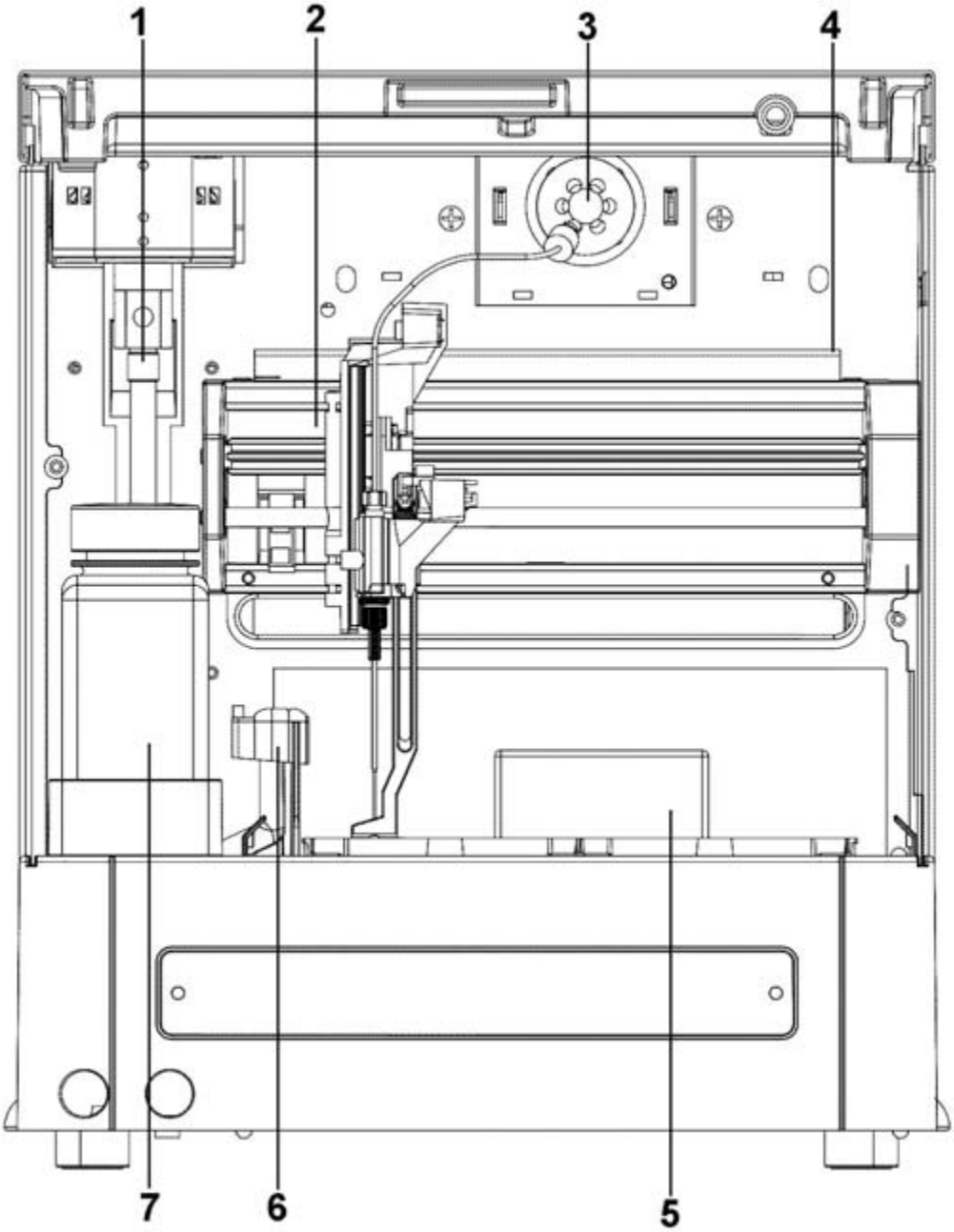

The sampling compartment houses the following parts:

1 Syringe
2 Needle arm
3 Injection valve
4 Valve leak bin
5 Sample compartment
6 Needle wash position
7 Wash liquid bottle

Insight autosampler – back view

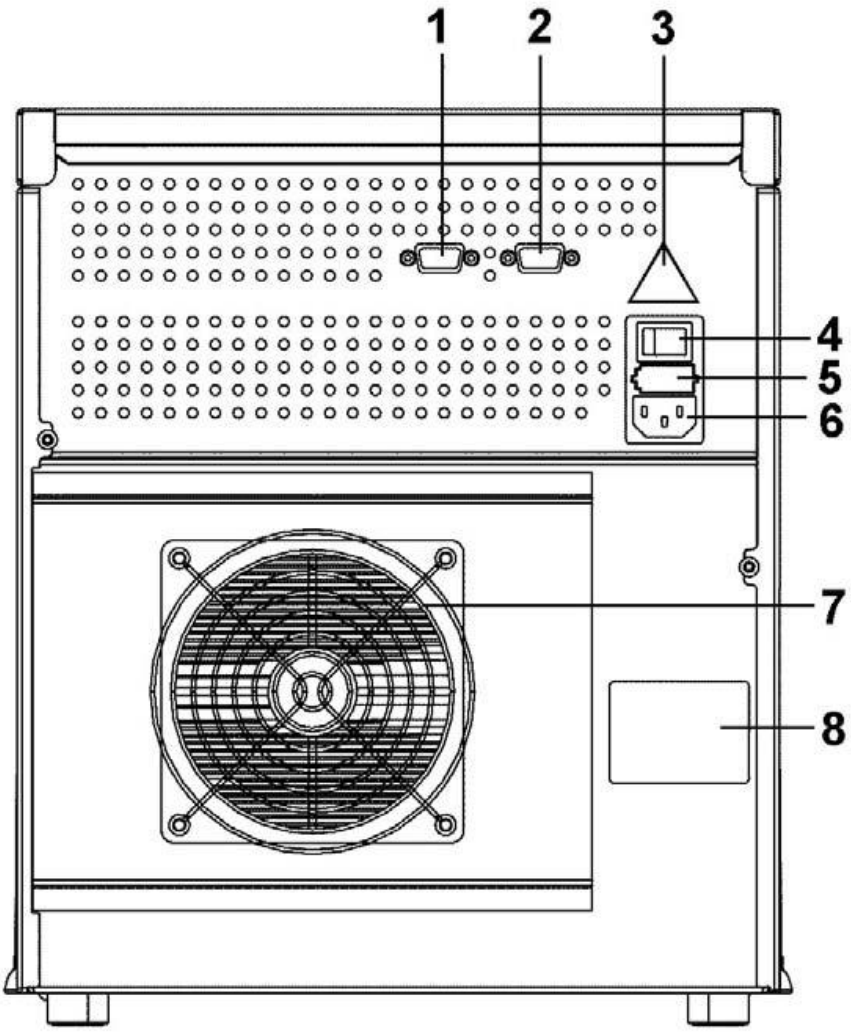

The back of the autosampler has the following items:

1 9-pin male connector (inputs/output)
2 9-pin female connector (serial interface)
3 ***warning label*** (see "Control I/O connections" appendix B)
4 on/off switch
5 fuse box
6 power connector
7 cooling fan (do not obstruct!)
8 type label

2-4. Injection Modes: Overview and Comparison

There four injection modes available to accommodate a wide variety of applications:

- ***Full loop injections*** (on page 11): for maximum precision
- ***Partial loopfill injections*** (on page 14): for maximum accuracy
- ***µL Pickup injections*** (on page 17): for zero sample loss
- ***Easy microliter pickup*** (EMP) (on page 20): for maximum convenience

The syringe is used to aspirate the sample from a vial into the sample loop. The buffer tubing between the syringe and the injection valve prevents contamination of the syringe. Wash solvent is used:

- to remove the sample from the buffer tubing and sample needle
- to rinse the buffer tubing and sample needle.

Allowable Injection Volumes: based on syringe and buffer tubing

The maximum injection volumes are calculated with the following formulas:

- Full loop : injection volume = loop volume
- Partial loopfill : max. inj. volume = ½ of loop volume
- µL Pickup : max. inj. volume = (loop volume - 3 x needle volume)/2
- EMP : max. inj. volume = loop volume

A 500 µL syringe, 1000 µL buffering tube, 100µL sample loop and 15 µL needle are standard.

The following injection volume ranges are available with the standard configuration:

- Full loop : 100 µL
- Partial loopfill : 0 - 50 µL
- µL pick-up : 0 - 27 µL
- EMP: 5-100 µL

Descriptions of each injection mode (see next page)

Descriptions of each injection mode

Full loop gives maximum possible reproducibility < 0.3%, but not maximum accuracy, since the loop volume is specified with an accuracy of ± 10%. Minimum sample loss = 230 µL (2 x loop overfill + flush volume for 100 µL sample loop and 15 µL needle).

Use this method when you have a lot of sample volume and can afford to waste a great deal, but need maximum reproducibility. Make sure to also inject your standards using the same sampler loop. Most of Eicom customers will not fall into this category.

Partial loopfill gives maximum accuracy plus reproducibility better than 0.5% RSD for injection volumes > 10 µL. Minimum sample loss (Flush volume). 30 µL is the recommended minimum flush volume, smaller flush volumes can be programmed, but will result in decreasing performance.

When using this method you will lose whatever flush volume you program. The flush volume is aspirated through the needle at the beginning of each injection. The function is to clear the needle wash solution and replace it with sample. The standard needle volume is 15µL. This means if you set the flush volume to less than 15µL, wash solution will be injected in place of actual sample. If the flush volume is set to less than 30µL, there is a significant chance that some wash residue will still be injected with the sample.

µL Pickup offers no sample loss, maximum accuracy (same as partial loopfill), but slightly lower reproducibility: RSD better than 1% for injection volumes > 10 µL.

The ability to not waste a single µL of a valuable sample is a great advantage with this method. However, because the autosampler's wash solution will is be used to load the sample into the sample loop, you will be injecting whatever is being used as the wash solution. In nearly all cases, this necessitates that mobile phase be used as the wash solution. Certain mobile phases may be prone to bubble formation and are not normally degassed with Eicom HPLC systems. Another disadvantage is that without proper rinsing of the system after each use, salts in the mobile may damage the injection valve.

EMP allows the injection of small volumes <u>*without using mobile as wash/transport solution*</u> and results in good precision with about a 0.5 µL sample loss compared to manual injection and the RSD is less than 2% for injections of >10 µL

This is the simplest and most user friendly method for injection of small samples with a minimum of sample loss. This method clears wash solution from the needle at the beginning of each injection with air, and mobile from the sample loop in used to pick up the sample which means only sample and mobile phase are injected. So a simple water wash solution can be used. The only sample loss comes from residue left behind in the needle after loading the sample loop, typically less than 0.5 µL per injection. Eicom strongly recommends the use of this method for sample between 5 µL and the full loop volume.

2-5. Full Loop Injections

The sample loop is completely filled (quantitatively) with sample. This type of injection results in extremely good reproducibility.

Initial situation
The injection valve is in the INJECT position. If you are using the pressure assist function (section 2-8), headspace pressure will now be applied through the outer air needle to ensure that no air or vapor bubbles are formed during sample aspiration.

1. The syringe dispenser aspirates the "flush volume" from the sample well/vial to fill the sample line with sample and remove wash solvent.

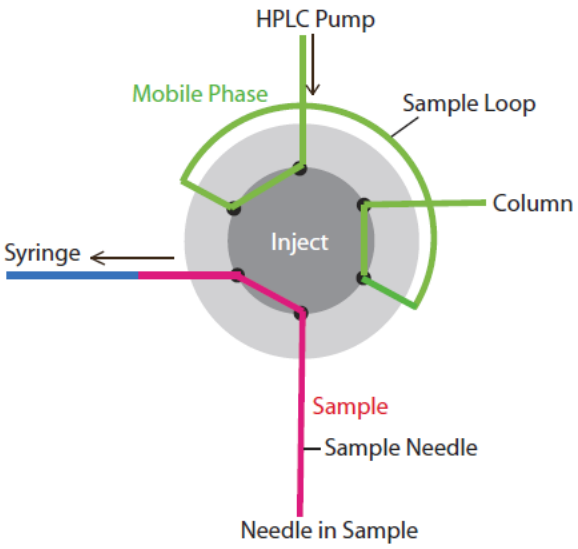

2. The injection valve switches to LOAD, placing a distinct sample plug between the syringe and sample loop

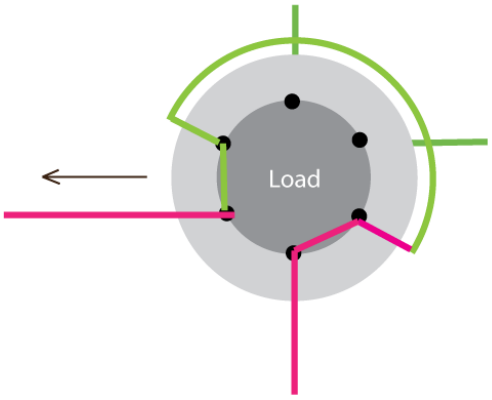

3. The sample loop is quantitatively filled by transporting a number of times the loop volume through the loop, depending on the volume of the loop.

3 x loop volume for loop ≤100 µL
2 x loop volume for loops 100 - 500 µL
1.5x loop volume for loop ≥500 µL

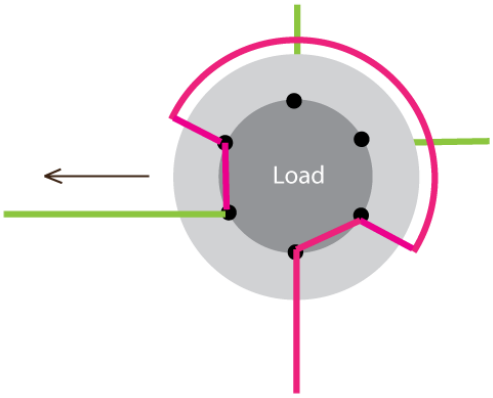

4. The injection valve switches to the INJECT position. The sample loop is now part of the HPLC mobile phase flow path. The sample is transported to the column and the analysis starts. A wash routine is performed after each injection.

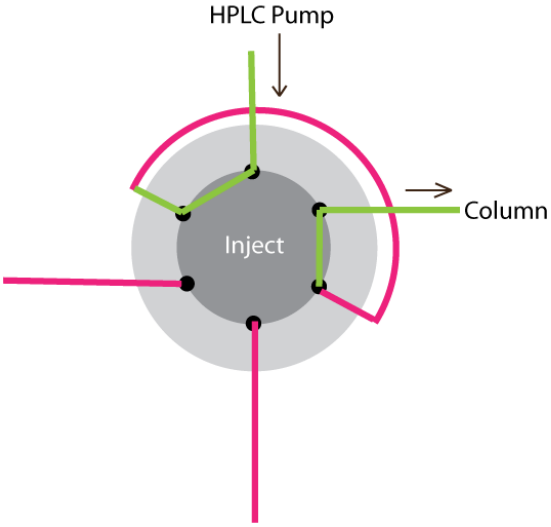

Air segment with full loop injections

An air segment of 5 µL can be used to reduce the amount of flush volume. This air segment is at the front of the flush volume and will not be injected. With a standard needle, the flush volumes must be a minimum of 30 µL for injections with air segment, and 35 µL for injections without air segment. If samples are highly viscous it may be necessary to program larger flush volumes and reduce the syringe speed for better performance.

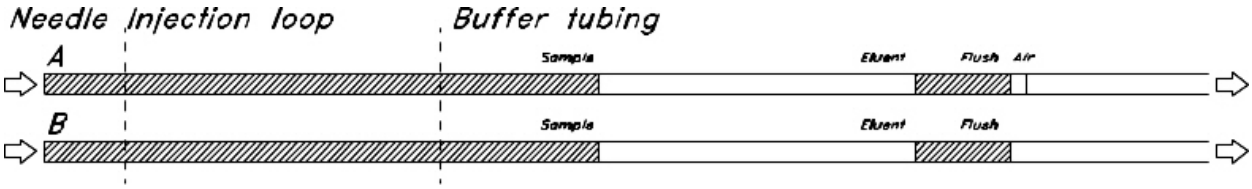

2-6. Partial Loop Injections

The switching sequence for a partial loopfill injection is:

Initial situation:
The injection valve is in the INJECT position. If you are using the pressure assist function (section2-8), headspace pressure will now be applied through the outer air needle to ensure that no air or vapor bubbles are formed during sample aspiration.

1. The syringe dispenser aspirates the "flush volume" from the sample vial to fill the sample line with sample and remove wash solvent.

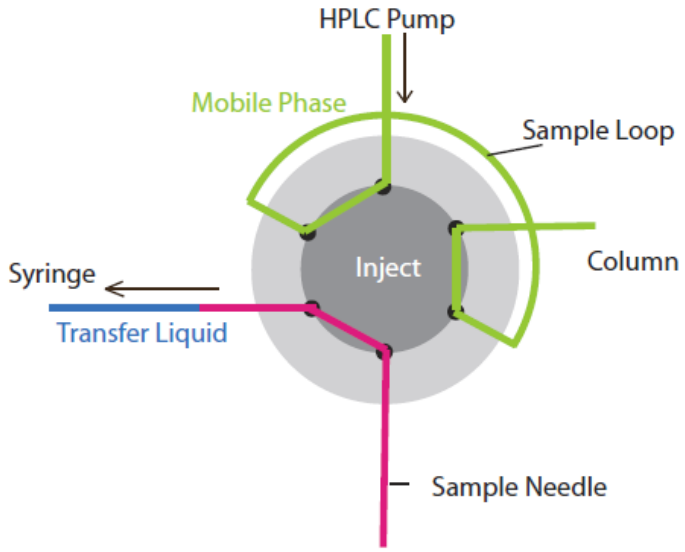

2. The injection valve switches to LOAD, placing a distinct sample plug between the syringe and sample loop.

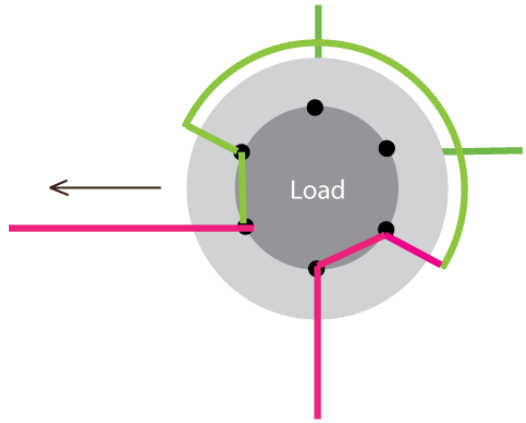

4. The programmed injection volume is now aspirated into the sample loop.

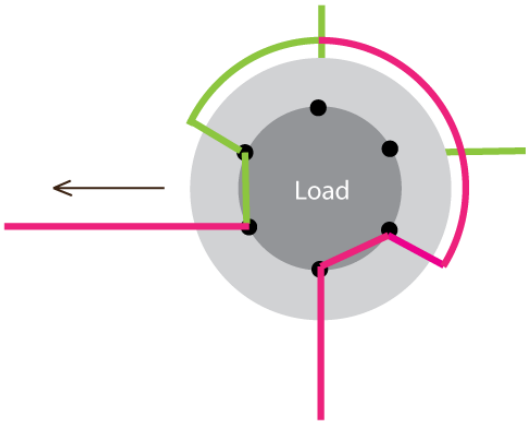

5. The injection valve switches to INJECT. The sample loop is now part of the HPLC mobile phase flow path. The sample is transported to the column and the analysis starts.

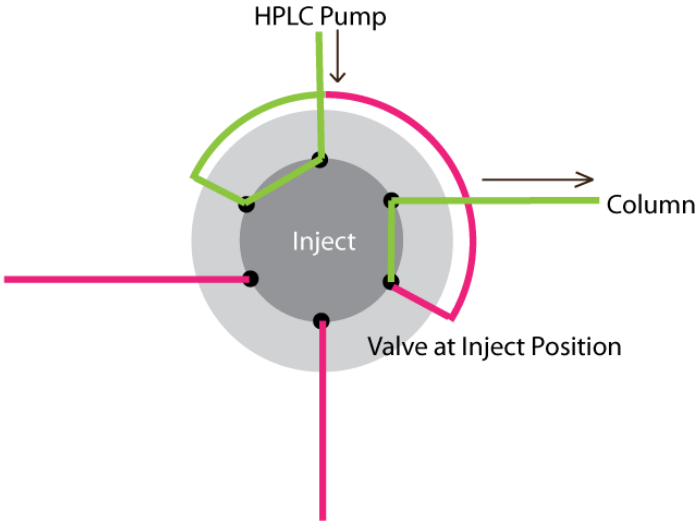

If an injection is from the same vial and no wash routine is programmed, the next injection sequence will start with a flush of 50% of the programmed flush volume. Otherwise, it will start with a flush of the programmed flush volume. If the withdrawal of sample for the next injection exceeds the total volume of the sample buffer tubing, the buffer tubing is rinsed before the next injection. The next injection will start with the programmed flush.

Air segment with partial loopfill injections

An air segment can be used to reduce the amount of flush volume. The air segment is at the front of the flush volume and will not be injected. With a standard needle, the flush volumes must be a minimum of 30 µL for injections with air segment and 35 µL for injections without air segment. If the samples are highly viscous, it may be necessary to program larger flush volumes and reduce the syringe speed for better performance.

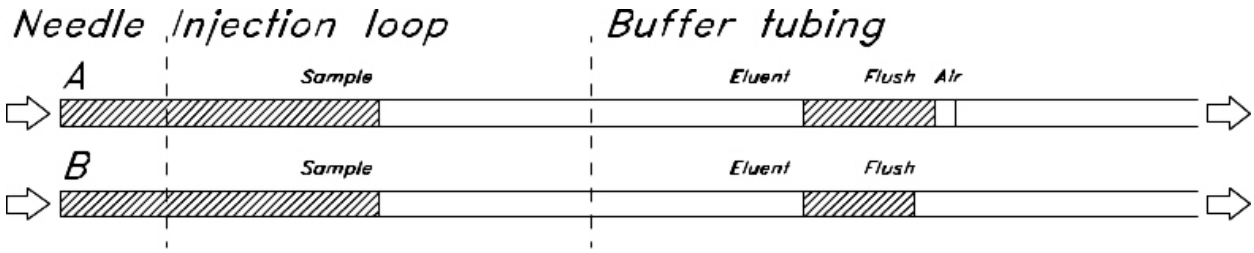

2-7. µL Pickup Injections

The switching sequence for µL pickup injections is:

Initial situation: the injection valve is in INJECT position.
Pressure assist function not available with this mode.

1. The sample needle enters the transport position and aspirates a transport plug from the transport position to fill the sample line with transport liquid and remove wash solvents.

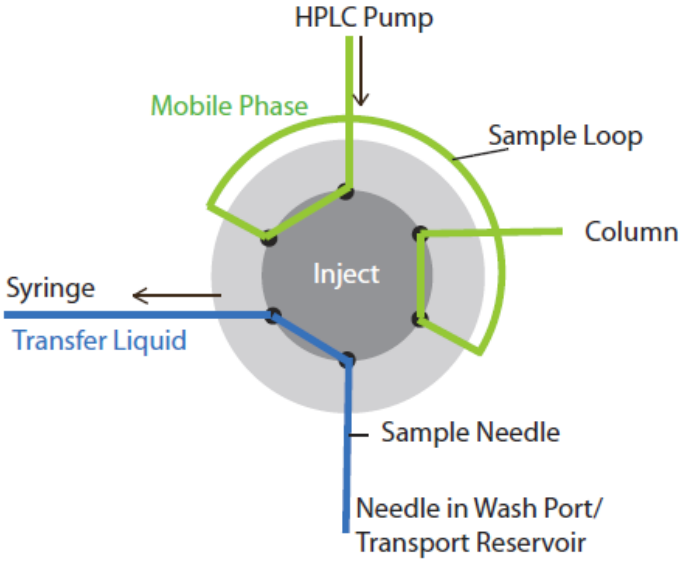

2. The needle moves from the transport position to the sample vial. The injection valve switches to LOAD position.

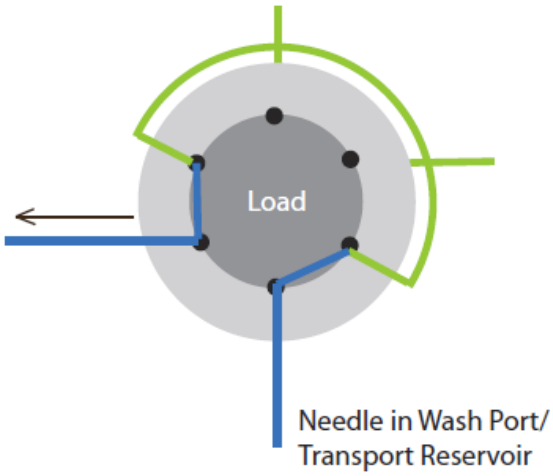

3. The programmed injection volume is aspirated from the sample vial.

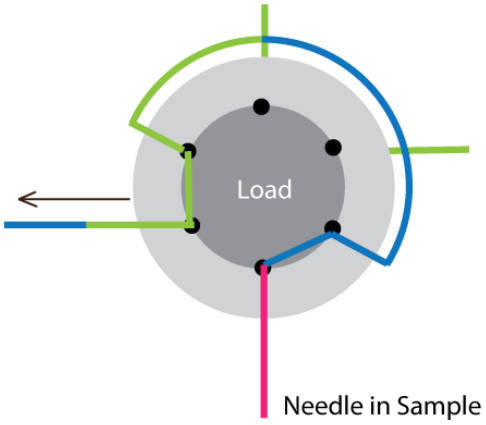

4. The sample needle moves back to the transport position. A second transport plug is aspirated. The sample is quantitatively transported into the loop.

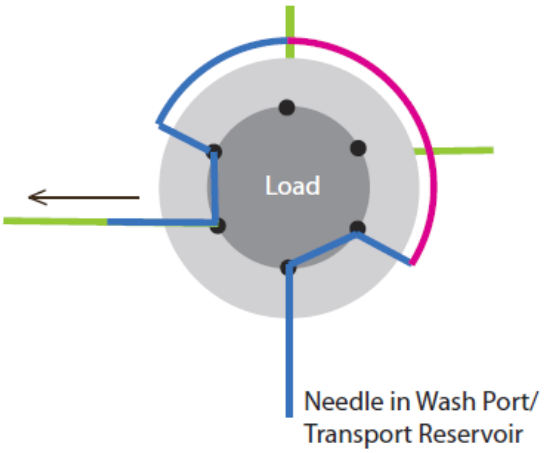

5. The injection valve switches to INJECT. The sample loop is now part of the HPLC mobile phase flow path: sample is transported to the column. The analysis timer starts. The sequence is repeated for each injection.

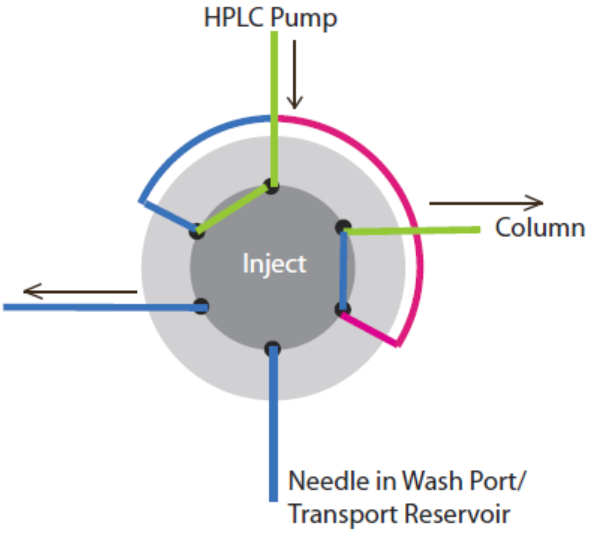

Air segment with µL pickup injections

If an air segment has been programmed, it appears at the front of the first plug of transport liquid and at the front of every sample plug. In this injection mode:

- the air segment at the front of the sample plug is injected into the HPLC system
- no headspace pressure can be applied on vials/wells in this mode to avoid sample errors due to air expansion during exchange from the sample vial/well to the transport position.

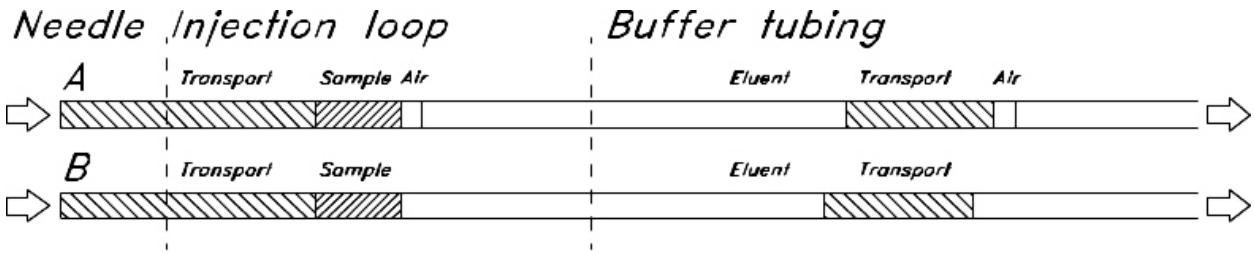

2-8. Easy Microliter Pickup (EMP) Injections

The switching sequence for EMP injections is:

Initial situation: the injection valve is in INJECT position.

1. Aspirate air to clear the needle of wash solution

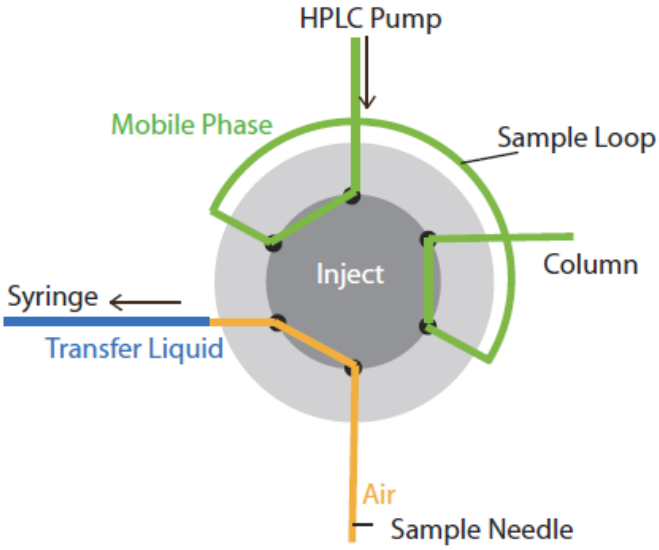

2. Switch injection valve to load

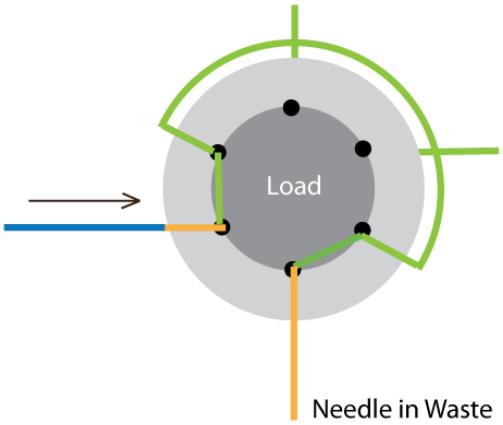

3. Dispense mobile phase from sample loop to needle

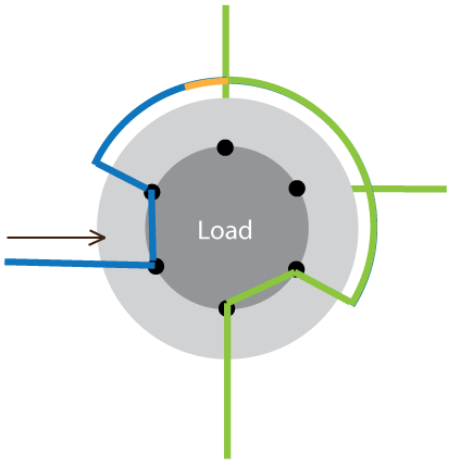

4. Pickup 1 µL air and then sample volume from sample vial/well

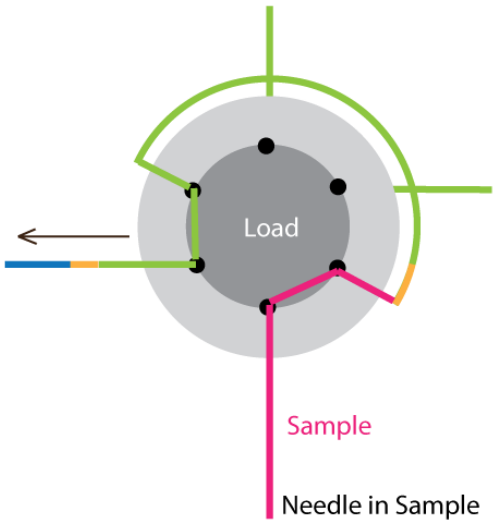

5. Needle up and aspirate air to pull sample into sample loop

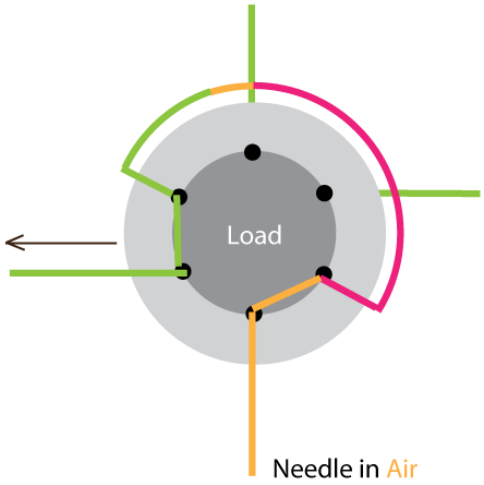

6. Switch injection valve to inject.

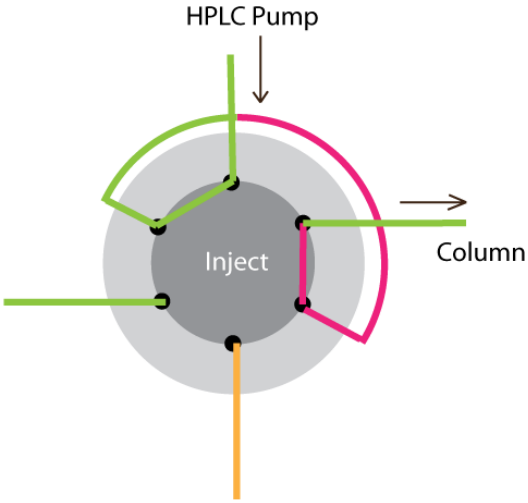

2-9. Pressure Assist (included, but air needle not installed)

For some injection modes, sample aspiration can be assisted by pressurizing the sample vessel. This provides high precision with simplicity and reliability:

- no moving around with the sample needle
- reduced risk for bubbles in the sample line
- no needle port that wears and contaminates.

In full loop and partial loop injection modes, you have the option of injecting air into the sample vial/plate above the fluid level to assist with the aspiration of viscous samples and too reduce bubble formation in the sample line. This option requires you to choose and install the correct air needle for your plate or vial selection. Please consult with Eicom directly for further information.

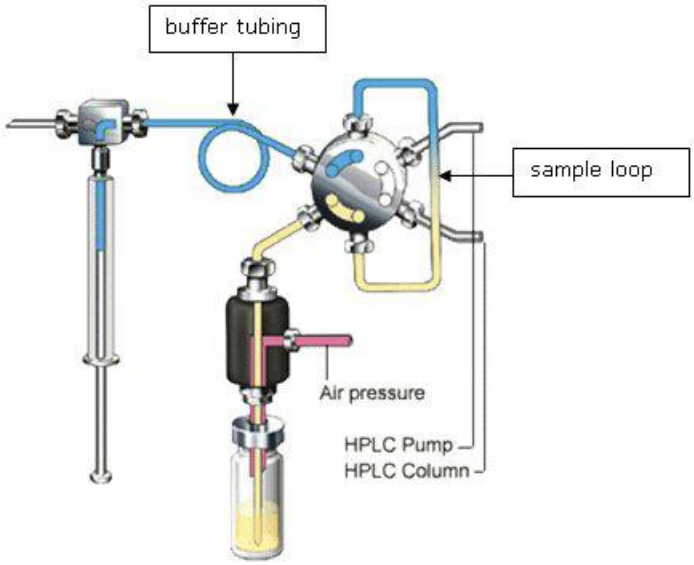

2-10. Sample Handling

Standard high or low well plates or vial trays can be used. The sampling compartment of the Insight can house two different well plates. Any combination of well plates is allowed, except for 384 Low on the left and 96 High on the right.

The Insight autosampler comes with these standard fittings:

- 15 µL injection needle
- 500 µL syringe
- 1000 µL buffer tubing
- 100 µL sample loop

All replaceable parts are easily accessible. Refer to section 5: Maintenance or contact Eicom for more information.

Take the following into account when handling samples:

- Standard vials can best be filled by means of a narrow-end pipette to allow air to escape when filling the vial.
- **Do not fill vials/wells to the edge. If using the air needle, be aware the sample will be forced into the air needle, risking cross-contamination of samples and soiling the needles.**
- It is important that seals and capmats are airtight to prevent air bubbles from forming and to block evaporation of volatile samples.

We recommend use of the following seal types:

- For standard (low) well plates: pierceable capmats (Pre-slit or silicon) or sealing tape
- For deep well plates: pierceable capmats (Pre-slit or silicon) or sealing tape
- For vials: standard septa (thin types)
- When you use uncapped vials/wells, injection performance may not be to specification.

CAUTION

Do not use vials with hard caps that are not designed for being pierced by an injection needle (**do not use e.g. Eppendorf SafeLock micro test tubes**). The tubes/vials may become stuck on the needle and cause an instrument error.

3. Installation

Make sure that the ventilation holes at the back of the autosampler are not blocked. Note that if the ventilation holes are blocked, this may influence performance and cooling capabilities of the autosampler.

- If objects are placed on top of the Insight, this may also influence the cooling capabilities. Objects can be placed on any side of the ; however, make sure these objects are placed at a distance of:
  - 5 cm from the Insight, if objects are placed at only one side
  - 10 cm from the Insight, if objects are placed on more than one side
- Do not place the Insight in an area subject to excessive dust or shocks.
- Use the Insight indoors only.
- Do not place it near a source of heat or in direct sunlight, as this may influence the cooling capabilities of the system.

3-1. Electrical Connections

1. Attach the power cord to back if Insight and plug into 120-220V electrical outlet.
2. Use the supplied serial interface cable to connect from the autosampler to the computer's serial port. If one is unavailable, you may use a serial-to-USB adapter to make the connection to a free USB port on the computer. (ex. Keyspan adaptor)
3. Connect the signal input/output cable to the autosampler.
4. Connect the red and black leads from the branch with 3 wires to "signal in" terminals on the HPLC system.
5. Connect the red and orange leads from the branch with 4 wires to the "pump error" terminal on the HPLC system.

3-2. Fluid connections

Make sure that the following connections are made correctly.

1. Connect HPLC pump to port 1 of the injection valve directly or via a manual injector.

2. Connect HPLC column to port 6 of the injection valve.

Make sure to connect the injection valve ports in this order only. This will minimize the distance the sample travels in the sample loop and help prevent some broadening in some injection modes.

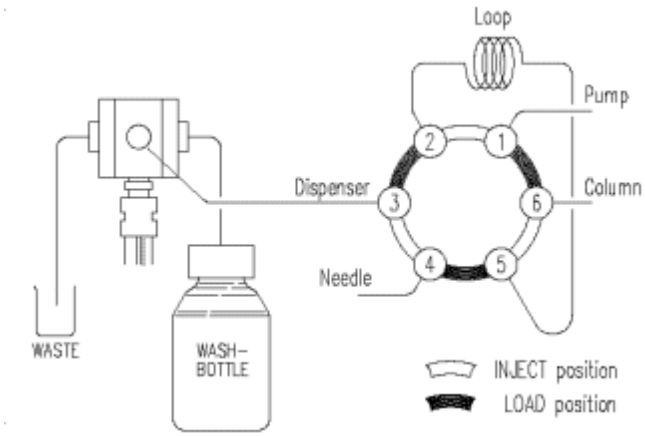

Please use the tubing guide integrated into the leakage drain to prevent the wash tubing from obstructing the horizontal movement of the needle unit.

Tubing materials and dimensions

The Insight comes standard with the following tubing:

Standard sample needle with tubing permanently attached (label 15 µL):
SS: 97 mm x 0.8 mm OD x 0.25 mm ID
Buffer tubing from high pressure valve to syringe valve (label 1000 µL):
ETFE (Tefzel): 1275 mm x 1/16” OD x 1.0 mm ID
Tubing syringe valve to wash solvent bottle:
PTFE: 400 mm x 1/8” OD x 1.6 mm ID
Tubing syringe valve to waste:
PTFE: 400 mm x 1/8” OD x 1.6 mm ID

Note the following if you need to install new tubing:

- insert tube ends always flush with ferrule ends
- do not overtighten nuts, as this may cause blockage in the flow path
- make sure that you always use tubing volumes that are suitable for use with the other items in the flow path

Drain tubing

Make the following connections for disposal of waste liquids:

- General waste: connect the drain tubing (included) to the left-hand drain hose connector (section 2-2). Place the other end in a bottle for waste (on the floor). All the liquid dispensed to the wash position drains here. Sample liquid that is not injected is also removed through this tubing.

- Condensation water and leakage drain: all leaked solvents and condensation (from cooling) drain through the right-hand hose connector (section 2-2, pg 6). Make sure that none of the drain or waste tubes is twisted such that the flow path is obstructed.

3-3. Wash Solvent and Syringe Rinse (and sometimes transport fluid)

Use a clean bottle for the wash solvent. Place a one-liter glass bottle on the left-hand side of the Insight. Route the tubing out of the hole it the upper back corner of the shroud/door assembly and into the wash bottle.

Wash solvents:

- Eicom recommend using ultra-pure water or 20% methanol. This is sufficient for most Eicom users.
- You may more aggressive mixtures if you prefer, or find it necessary, depending on your application. For example: water and isopropanol (80 /20%)
- Mobile phase.

You must wash out any salt containing mobile phase after each use, as this could easily cause damage or clogging the instrument.

When using µL pickup as the injection mode, the wash solution doubles as a transport fluid. That means that the "wash solvent" will end up in the injection loop when the sample is injected. (refer to section 2-3)

To fill the wash solvent tubing, needle, and wash port (doubles as transport reservoir in µL pick up method), perform the following steps:

1. Place the end of the wash solvent tubing in the filled wash solvent bottle.
2. After connecting to the autosampler, use the start initial wash command in the autosampler dropdown menu or at the top of the autosampler window.
3. Repeat step 2 until the wash solvent tubing and the syringe are completely filled.
4. Then run the fill transport command several times.
5. Initialize and you are ready to begin your protocol.

Syringe

A 500 µL syringe is standard in the Insight. Note that the Insight will give the best results if all air is removed from the syringe. Perform an extra wash whenever necessary to remove air from the syringe.

4. Instrument Control: Envision Software Interface

4-1. Integration with Envision

In order to activate autosampler control by Envision, you must *purchase a license* from Eicom. If you have not purchased a license, contact Eicom to obtain another simple, stand-alone program for free. If you have purchased the license, enter the correct license code in the *User code…* section of the <Help> menu before logging in. You will also have to add the AS-700 to the instrument configuration by selecting *System Configuration…* in the <System> menu.

If you are not familiar with the Envision software, please consult help menu of Envision. You may also download a Quick Start guide for Envision from the Eicom Web Site Support page.

There are two ways to control the Insight autosampler from within the Envision software:

- Directly by selecting commands in the Device monitor window (ex. start wash, move tray, etc)
- Or, by running a sequence file with a method file that contains autosampler commands.

4-2. Direct Control via the Device Monitor

Access the Device Monitor from the <Monitor> menu or via the icon in the Instrument window as shown below

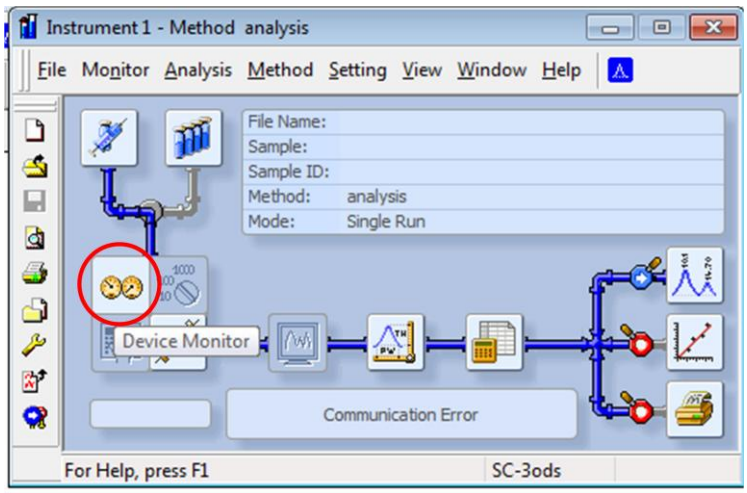

The windows shown below allow you to directly control some basic functions of the autosampler without modifying a method file. More commands can be found by clicking the [*Service…*] button.

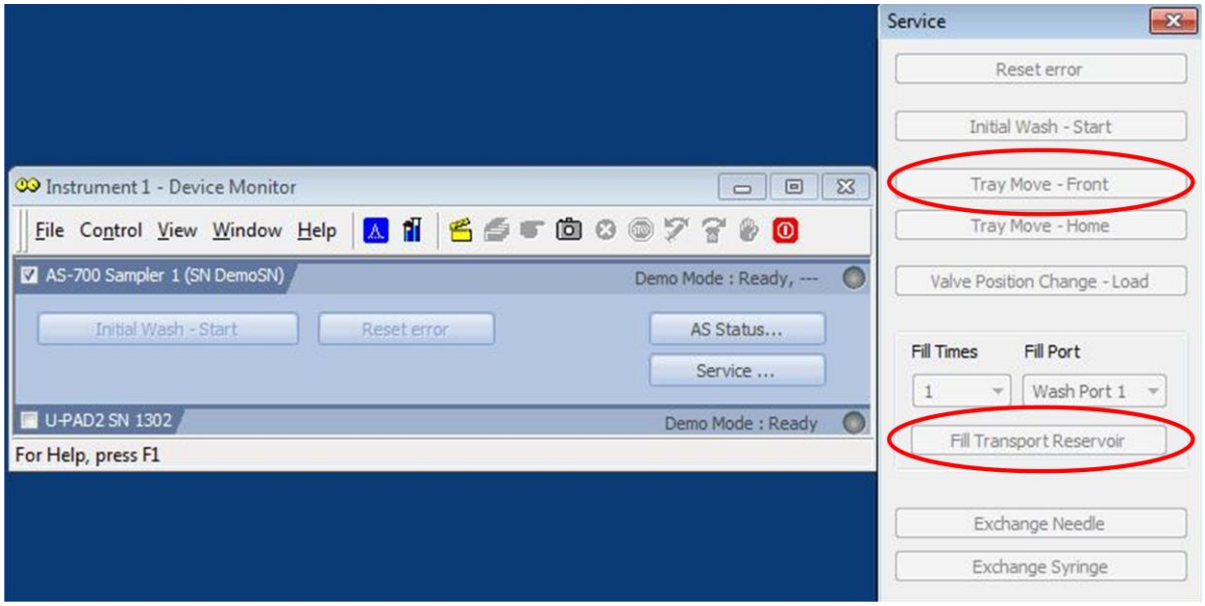

Initial Wash

In order to prime the system by running the *fill transport reservoir* 3 to 5 times. As the wash runs, watch the syringe and verify that there are no bubbles in the syringe or tubing connecting to the needle. This will need to be done each time you set up to run a sequence. It will also be used to clean the out the autosampler before shutting down.

Move Tray - Front

Use can use this command to bring the tray forward to make loading your samples more convenient.

Take care to fully seat the plate or vial adapter. If crooked or not all the way down, the needle may be damaged and require replacement.

Switching the injection valve

By selecting the “Valve Position Change-Load” the injection valve will change to the Load position. So, the valve is in the opposite position of the option displayed on the button. When you click, you should hear the valve move immediately.

When doing a **manual injection** with an injector placed before the autosampler, you will need to set the autosampler injection **valve to the load position**. This will shorten

the path that the sample takes and reduce peak broadening.

4-3. Autosampler Method Files

The autosampler is controlled by incorporating autosampler commands into Envision method files. Eicom provides pre-programmed methods that include autosampler control for various injection modes, mixing methods and double injections. These “template” files are located in the ***<C:/Envision/common>* folder.** To create a new method:

1. First decide which injection method you want to use. (i.e. EMP, µL pickup, mixing, etc) For help choosing the right one please, refer to sections 2-4 and 2-5.

2. Open the correct template method and save it with a new name in the project folder you are logged in under. This will preserve the original files to use as templates in the future.

3. Now select *AS Control…* from the *Method* menu.

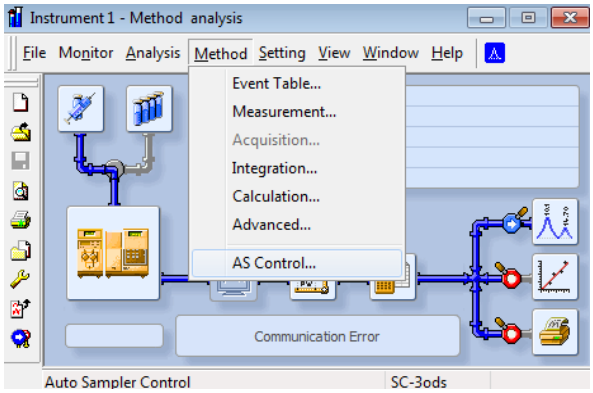

The method set up window will appear with the lower <u>AS tab</u> already selected as shown below.

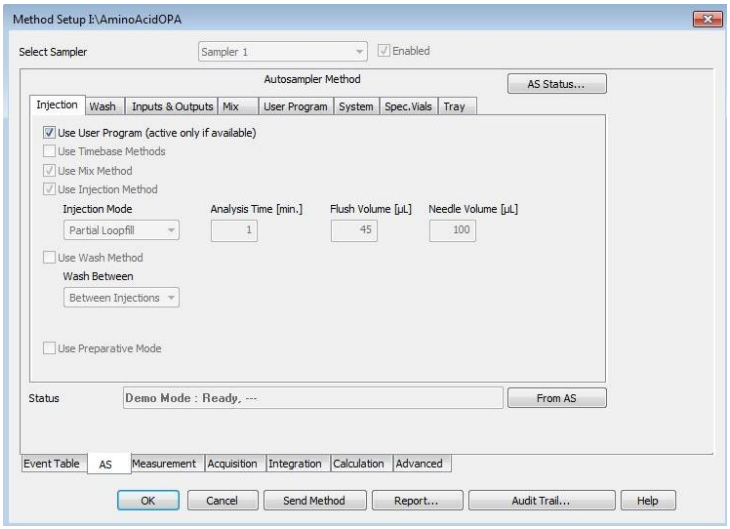

4. **Injection tab.** The box that says “Use Users Program” will be selected in many of the pre-programmed methods, such as the EMP injection method. For the partial loop method, uncheck the box and select the Partial loop method further down.

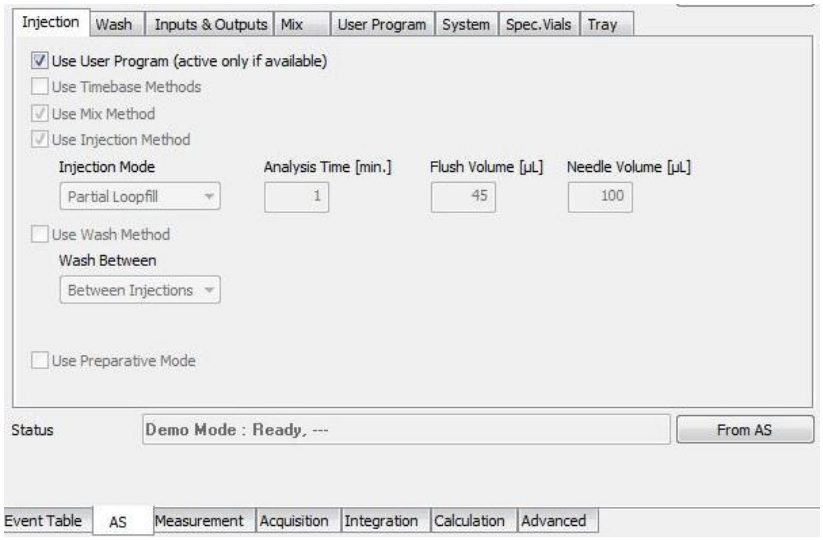

5. **Inputs and Outputs tab.** Check that Relay Output is set to “Injection Marker” and that Input 1 and 2 are set to “Freeze”. This will ensure that the autosampler stops making injections if it receives a pump error signal. For this to operate, the pump error signal output must be correctly connected to the autosampler I/O signal cable. (see Appendix B for details)

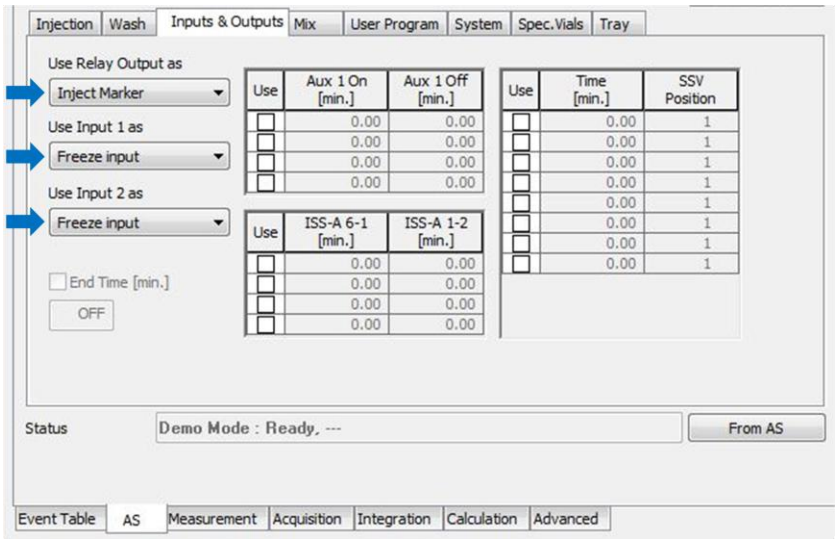

6. **User Program tab.** You should see a list of command that come from the template that you chose. You won’t need to modify anything here unless you want to change the needle height. Be careful though, an error in the sequence of commands can cause a malfunction.

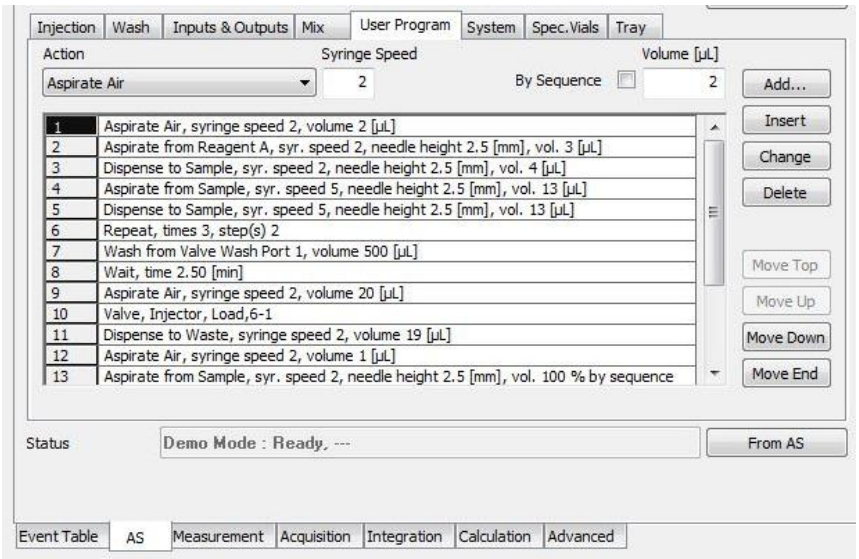

7. **System tab.** Check the autosampler settings. Check that the correct loop volume and syringe volume are input. You can active the cooling function by checking the box and then sending the method. You will hear the fan start. All other settings on this tab will be overridden by commands in the User Program tab. If you are not using the User Program, (for example, partial loop), then you set the other parameters here.

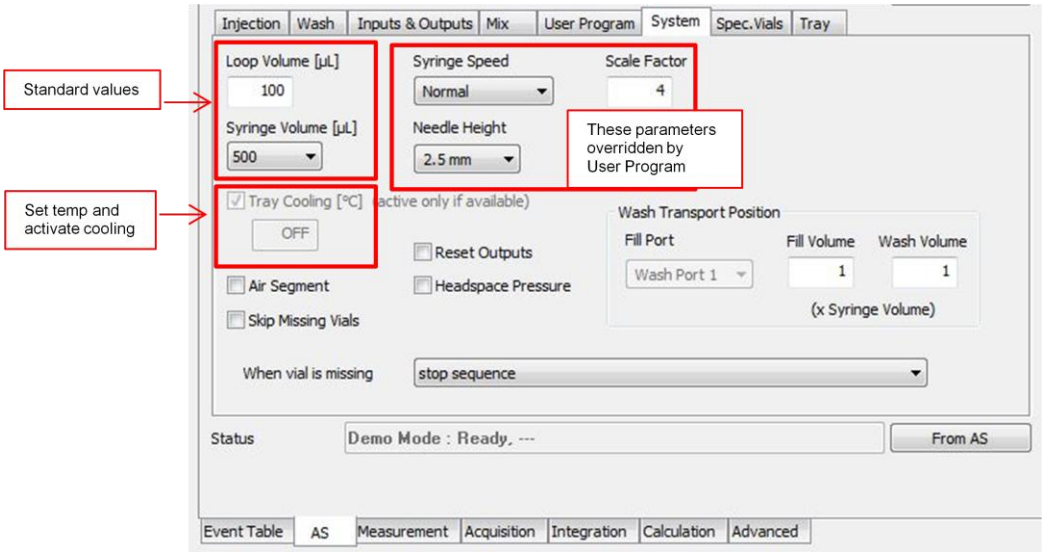

In order to get the most responsive temperature change and avoid condensation, make sure the cooling cover is in place.

8. **Spec. Vials tab.** Specify the correct plate and vial configuration on the “spec. vial” tab. 96-low is used for the PCR type plate, and 96- high is used for the small vials. If the wrong vials

configuration is chosen then you can damage the needle and require replacement. You can also specify how you want to number the wells of your plate or the positions of your vials by setting the “Plate Processing” either to Rows or Columns. Then go to the Tray tab to verify the settings are correct.

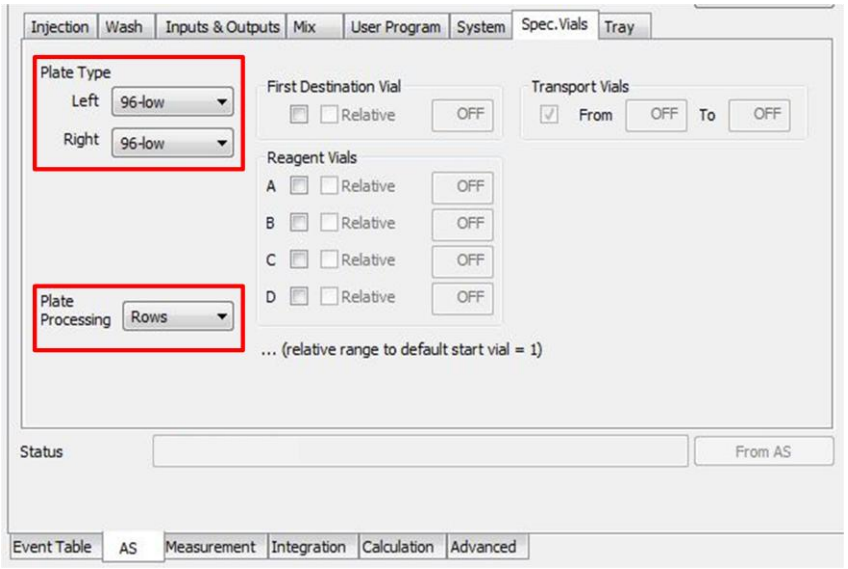

9. **Tray tab.** If Plate Processing in the Spec. Vials tab is set to:

ROW

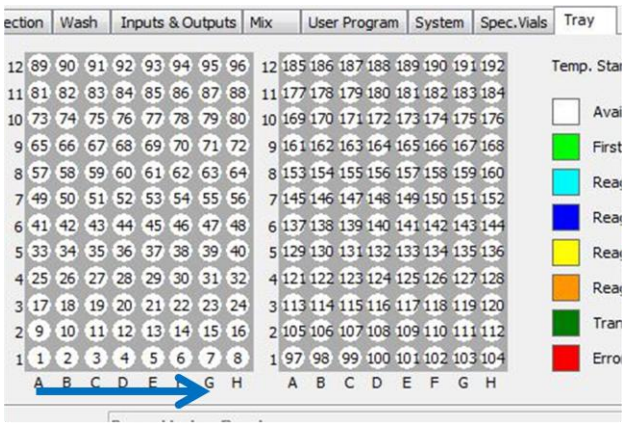

COLUMN

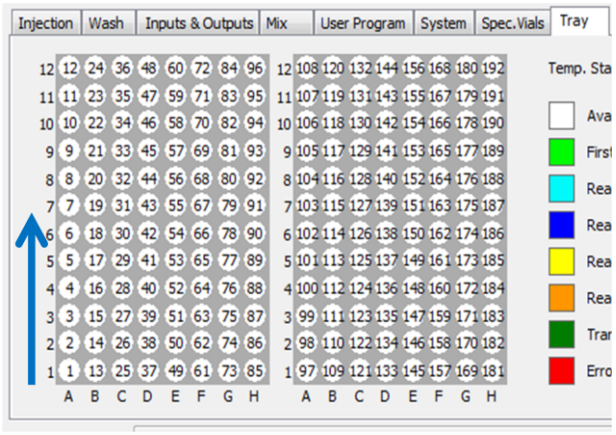

10. Save the method.

4-4. Autosampler Sequence Files

How to **create a sequence** with autosampler control methods:

1. Open the sequence window by selecting *Sequence* from the <Analysis> menu.

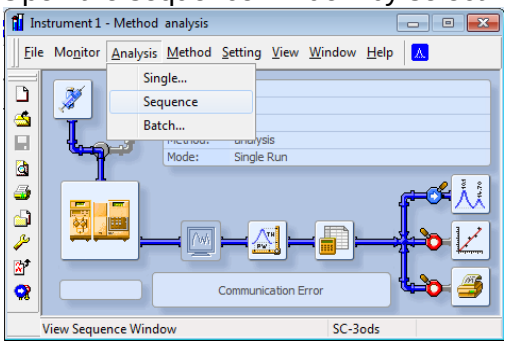

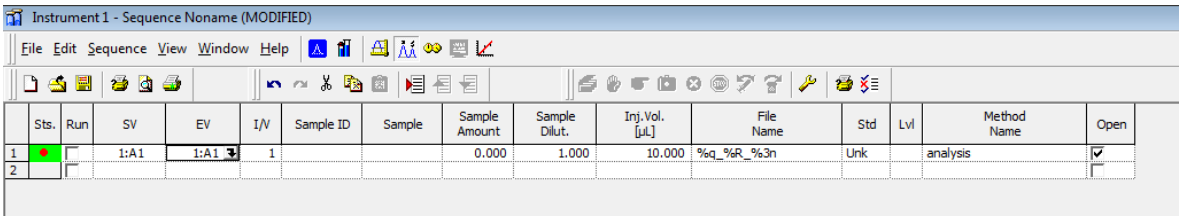

2. Enter the start vial (SV) and the end vial (EV) according to the plate processing pattern that you selected in the method. Also, designate how many injections per vial (I/V) you want.
3. Enter the injection volume in the “Inj. Vol.” column.
4. In the “Method Name” column, navigate to the location of the method file that you just created, if it’s not already in the table.

Hint. You can make the column thinner or wider by dragging the bar between the menu column headings. Also, when choosing a file name, considering using the serial number or injection number in the first place such that all the files appear in the data folder in the order that they were created.

4-5. Run the Autosampler

How to **run a sequence** file with autosampler control:

1. When you first log in, you should hear the autosampler tray and valve initialize. If it doesn't, then there is usually something wrong with the communications. Check that the Keyspan serial to USB adaptor is correctly installed, and that the AS-700 has been added to the instrument configuration.
2. Now open a method with cooling turned on or you can visit the System tab in the AS portion of the method set up and turn the cooling on directly. You should hear the fan start.
3. Fill the lines with fresh wash solution and be sure any air bubbles are cleared out. Used the "Fill transport reservoir" command in the Device Monitor window 3-5 times until all bubbles are gone.
4. Use the **Plate to Front** command to bring the carriage to the front.
5. Open the front door and pull the cooling cover off.
6. Place the plates on the carriage. The plates should be set such that the A1 positions (top, left well) are on the edge of the carriage closest to you and toward the left hand side. (see section 4-2)
7. Replace the cooling cover and close the front door of the autosampler.
8. Use the **Run…** command from the <Sequence> menu. The autosampler should start shortly. If not, there may be a problem the sequence. For example, the method must had an autostop and run time set. Hover over the status box at the left of the sequence table to find out what the problem might be.

There may be a small delay before the autosampler begins to move while the method is being uploaded to the autosampler

4-6. Shutdown Procedure

1. Rinse with water; remove the column and precolumn and switch both the HPLC pump and autosampler wash supplies to water.
2. Start pumping water through system.
3. Perform a wash cycle using the Fill Transport Reservoir command in the Device Monitor window.
4. Repeat step 3.
5. Now switch the injection valve using the autosampler window. Leave it in each position for a few minutes.

This water rinse step is especially important if you have been using the µL pickup injection mode which requires salt containing mobile phase to be in the wash bottle

6. Repeat step 1-5 using methanol:water (20:80). The autosampler is stored with this solution inside to prevent bacterial growth.
7. Turn off the autosampler.

5. Maintenance

For all maintenance procedures:

1. Open the door of the Autosampler.
2. Remove the cooling cover by sliding it towards you.
3. Press the two buttons at the top sides of the door simultaneously.
4. Remove the door/shroud assembly by pulling it towards you.

You do not need to disconnect the Autosampler from the power source for any of the maintenance procedures. The direct software control needs to be available. Connect to the autosampler using the ASM (Alias service manager) software. You should not be logged into the Envision software.

5-1. Cleaning

In general, the autosampler needs very little maintenance. You can clean the outside with a damp cloth and mild soap.

Other items that may need periodic cleaning:

- ***valve leak bin*** (see " autosampler – front view" in section 2-2): a special leak bin is installed underneath the injection valve. You can clean this bin with a damp cloth with mild soap. (any salt crystals in the tray or on the valve indicate that the seal should be replaced.)
- sample tray: if sample has been spilled on the sample tray, clean the tray with a damp cloth and mild soap.
- drain tubing: regularly flush the drain tubing with solvent to prevent clogging and to ensure that liquids and condensate are disposed of.

5-2. Injection Valve and Rotor Seal

The Insight is equipped with an all PEEK injection valve.

Execute the following steps to remove and clean the injection valve:

1. Disconnect all tubing from the valve. The sample loop can stay in place if you are only replacing the rotor seal.
2. Remove three screws on the front face of the valve using a 3 mm hex wrench (**DO NOT Remove the Philips head screws**).
3. Gently remove the stator and take out the rotor seal.
4. You may now replace the seal if it is worn or clean the whole assemble if contamination (sample carryover) is suspected.
    - To clean, put all the parts (fittings, sample loop, rotor and stator) in a small beaker containing approx 0.1 N HCl. Then sonicate for several minutes. Please make sure that the small holes in the stator do not have air bubbles trapped inside so that the solution can wash the whole surface. Then rinse well with water.
    - The most commonly contaminated parts are the tubing ports and fittings.

5. Place the seal back on the rotor and fasten the stator in place
6. Reconnect all tubing to the valve.
7. In autosampler window, click **Initialize** to make sure that the valve is in the Inject position.
8. Perform a standard wash. The Autosampler is now ready for use.

5-3. Sample Loop

The Autosampler is fitted with a standard 100 µL sample loop (PEEK). A different sample loop size can be installed, but note that you will need the proper combination of ***syringe and tubing*** to ensure good results.

Take the following into account when you have installed a sample loop:

- connect the loop between ports 2 and 5 of the injection valve
- go to the autosampler tab (labeled AS) in the method set up window and adjust settings if you have installed a loop with a different volume.

Remember that the maximum injection volumes are calculated with the following formulas:

- full loop: injection volume = loop volume
- partial loop fill: maximum injection volume = 50% of the loop volume
- µL pickup: maximum injection volume = (loop volume -3x needle volume)/2
- EMP: maximum injection volume= loop volume

5-4. Replacement of Sample Needle

CAUTION

Please do not try to disconnect the plastic tubing attached directly to the metal part of the sample needle. This will damage the needle and require replacement.

Perform the following steps to replace the sample needle:

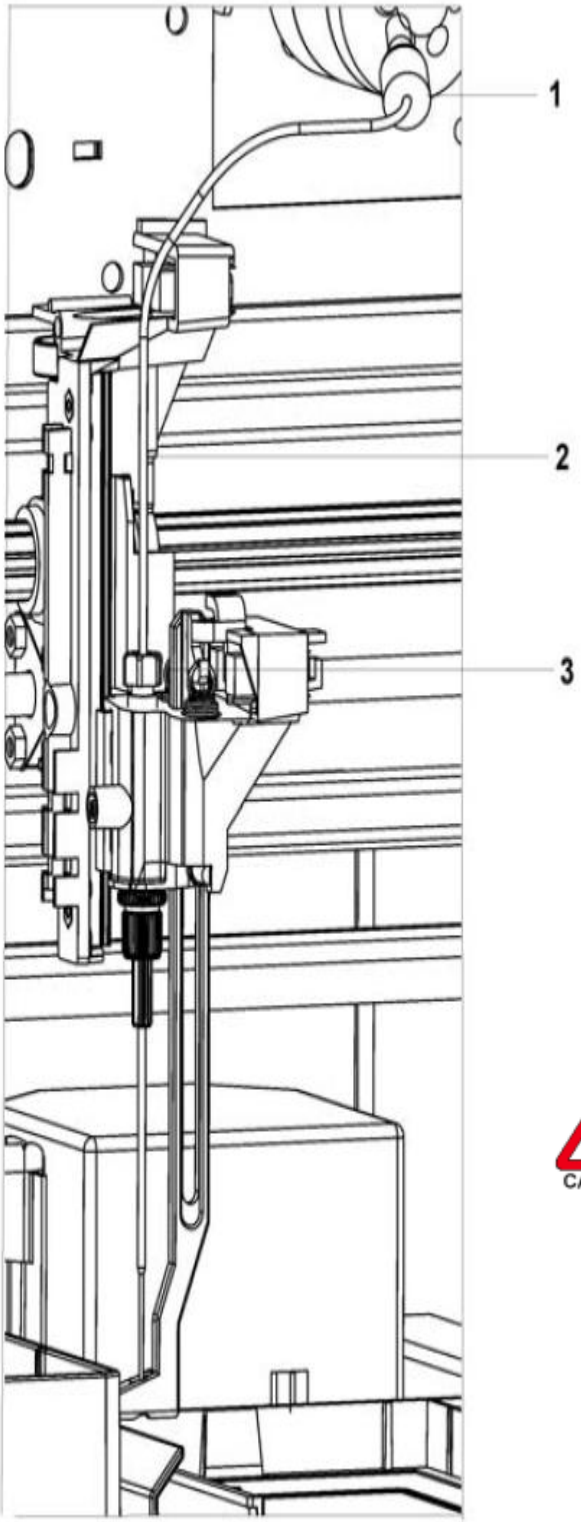

1. Open autosampler door, remove the cooling cover and any plates are tubes.
2. Select Exchange needle command from the device monitor. You will be prompted to remove any vials or trays. Then the needle moves to exchange position.
3. Loosen the needle connection nut (number 3).
4. Loosen the nut (number 1) that connects the tubing (number 2) to port 4 of the injection valve.
5. Remove the sample needle by pulling it out of its fitting by the tubing. The air needle will stay in place.
6. Install a new needle assembly; make sure that the air seal is around the needle. (Do not disconnect tubing and needle)
7. Tighten the needle assembly with the needle connection nut.
8. Connect the other end of the needle connection tubing to port 4 of the injection valve. Do not tighten too much as this may block the tubing.
9. Perform a wash routine to clean the new needle by clicking the Start Initial Wash button at the top f the window. The syringe will cycle 3 times.

CAUTION

If you use trays with 12 vials or 48 vials, make sure that the needle height settings is > 2mm to prevent the needle from touching the bottom of the vials.

5-5. Fuses

If the green LED at the front on the instrument is not ON, a fuse may have blown. If you need to replace the fuses, make sure that you install fuses of the same type and rating. 2 x 2.5A fuses are installed in the Insight: Fuses are located in the fuse box at the back of the autosampler.

Disconnect the Autosampler from its power source if you need to replace fuses.

Contact Eicom if problems with fuses are recurring.

5-6. Syringe Dispenser

The Insight is supplied with a standard 500 µL syringe.

Execute the following steps to install a different syringe:

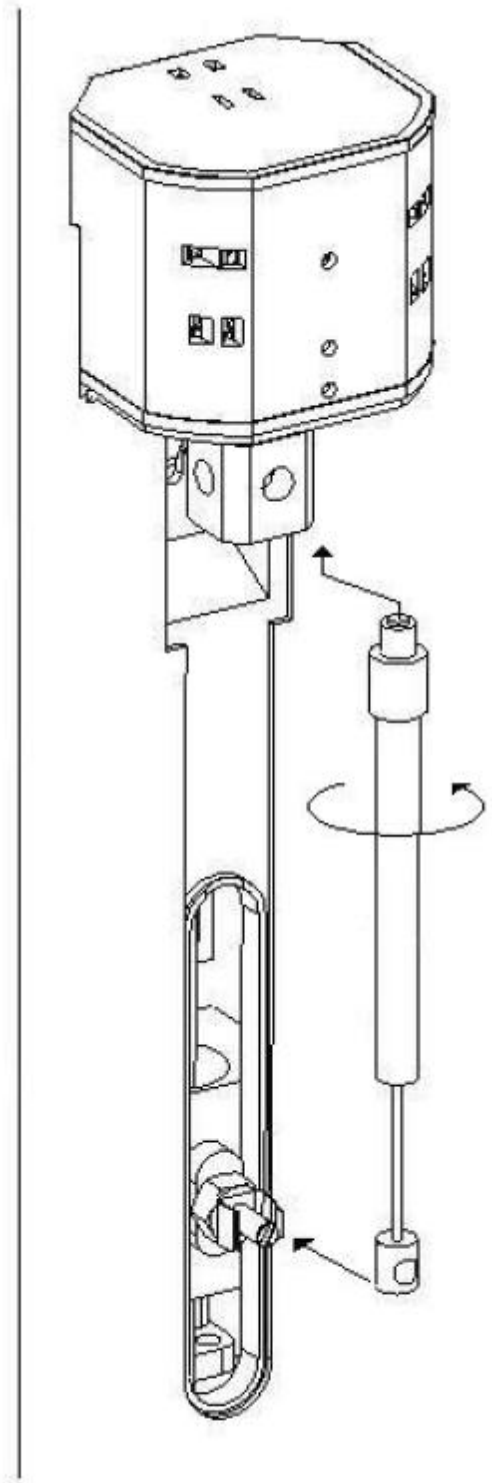

1. Select the **Exchange position** command in the device monitor window. The syringe will move half way down.

2. Unscrew the syringe from syringe valve, but make sure that the connector in the valve remains in place.

3. Disconnect the plunger from the syringe drive by pulling it straight forward. It is just held in by the metal clip. **Do not attempt to unscrew bottom of plunger**.

4. Fill the new syringe with wash solvent, preferably methanol. Make sure that most air bubbles are removed from the syringe.

5. Connect the plunger of the filled syringe to the syringe drive buy pushing it straight in. Make sure it is all the way seating in the clip.

6. Screw the syringe firmly into the connector.
7. Check that the bottom of the plunger if full seated by pressing on it. If it is partially out, the plunger shaft can rub on the glass barrel.

8. Run a wash cycle.

9. If there is still some air in the syringe, click start initial wash.

If there is still air in the syringe, repeat step 8 and gently tap the syringe as the wash solvent is dispensed to syringe waste.

6. Troubleshooting

Even though great care was taken in the design of the Autosampler, problems may occur:

- ***instrument errors*** (section 6-1): these can be caused by a variety of reasons.
- ***software errors*** (section 6-2): usually caused by faulty communication between instruments, or by faulty installation of the software.
- ***analytical problems*** (section 6-3): these may occur as a result of wear of parts, errors in injection settings and methods, wrong combination of sample loop, buffer tubing and syringe, etc.

6-1. Instrument errors

Incidental fault conditions may occur in any instrument. The Insight will generate an instrument error message with an error number, a short description of the error and instructions on how to proceed.

In most cases, you will be asked to either initialize the system, or to switch the system off and then on again. Always click **OK** and follow the instructions to resolve the error status.

Initialize the system use the initialize command in the autosampler menu or direct control window.

Make sure the Autosampler is connected to a grounded power source.

If the green LED at the front of the autosampler is not ON, a fuse may have blown or the power cord could be loose or unplugged.

If you are asked **to initialize the system**, perform the following steps.

1. Select the autosampler window in the autosampler menu. From this window you can control separate parts of the autosampler to check whether they function as intended.
2. Click **Initialize** to reset the system and prepare it for normal use.

If you are asked **to switch off the system**, and then on again, perform the following steps

1. Check that the communication cable between autosampler and PC is properly installed.
2. Turn the instrument off with the on/off switch at the back of the autosampler.
3. Turn the system on again with the on/off switch. The system is automatically initialized and is now ready for use.

6-2. Software errors

Software errors are usually caused by faulty communication between instruments. If a software error message appears, please note the code and message.

Things to check first:

1. Check all cable connections between instruments and computer to see if they are loose.
2. Open autosampler window and check if the instrument is connected. Disconnect and reconnect, or try a different com port from the options in the dropdown list
3. Initialize
4. Cycle main power
5. Check for recent changes to Method files.

Contact Eicom if you need further assistance.

6-3. Analytical problems

Analytical problems like bad reproducibility or carry-over may occur in any HPLC system. It may be hard to find the cause; you may have to try out several procedures. The first thing to do is to determine whether the problem is caused by the autosampler or by the rest of the system:

1. Replace the autosampler by a manual injection valve to discriminate between autosampler problems and other problems.
2. Do a number of Full loop injections. If the results are fine, the fault is in the autosampler; if not, check the rest of the HPLC system.

Please bear in mind that analytical problems may also be caused by external influences like temperature or light-sensitive samples. Make sure that the application was running trouble-free before and that no changes have been made to the system.

Some possible causes and solutions for analytical problems are listed below. Contact service if you need further assistance.

If reproducibility is not according to specifications, check the following possible causes:

Causes	Solutions
Air in flow path	Do an initial wash (from autosampler window)

Leaking syringe	If leakage occurs at the **top of the syringe**, check whether it has been properly mounted.
	If leakage occurs at the **bottom of the syringe**, replace plunger tip or syringe.
Leaking syringe valve.	Check or replace valve
Rotor seal worn out	Replace seal. Check stator. (section 5-2)
Dead volumes in tubing connections.	Redo connections with new ferrules and nuts.

If a blank gives a peak that is too high for your criteria:

Solubility problem	You can either modify your sample, or accept carry-over.
The blank you use has been contaminated	Use a new blank.
Bad match between sample characteristics and hardware.	Check hardware:
	Needle: either use an extra wash (to wash the inside and outside needle), or install a different type of needle (Steel or Silica-coated)
	Valve: Try cleaning or replacing injector valve seal (section 5-2)
	Tubing: install different tubing (Steel, Peek)

	between autosampler and column, or use different wash solvents
Cause not clear.	Check if you can solve the problem by using different wash solvent mixtures.

If no injection takes place:

Blockage in flow path	**1** Disconnect needle from valve. **2** Start a manual wash. **3** If solvent flows from the injection port, check the needle; if no solvent flows from the injection port, disconnect buffer tubing from valve. **4** Start a manual wash. **5** If solvent flows from open end: check rotor seal; if not: disconnect buffer tubing from syringe valve. **6** Start a manual wash. **7** If solvent flows from syringe valve: check buffer tubing; if not, check for over-tightened connections in the entire flow path and check the syringe valve.

Leakage from the injection valve	**1** Disconnect the needle tubing and buffer tubing. **2** Connect port 1 to an HPLC pump. **3** Block port 6. **4** Start the pump at a low flow. **5** Observe ports 3 and 4 for leakage. **6** If leakage occurs at ports 3 and 4: check rotor seal; if not: recheck with manual valve.

Observe the maximum allowed pressure of 35MPa (5000 psi) to prevent leakage in the valve!

Appendix A: Specifications

General

Sound pressure level	LeAq < 70 dB
Working temperature	10 - 40°C (indoor use only)
Storage temperature	–25 - +60°C
Humidity	20 - 80% RH
Safety and EMC compatibility	According to EC-directives; CSA (UL) Approved
Installation class	II
Pollution degree	2
Altitude	up to 2000 m
Dimensions	300 mm x 575 mm x 360 mm
Weight	21 kg
Max. weight that can be placed on top of AS-700	65 kg
Power requirements	95 - 240 Volt AC ± 10%; 50 - 60 Hz; 200VA
Viscosity range	0.1 - 5 cP

Sampling

Sample capacity	2 Micro-titer Plates according to SBS standards: • 96-well high/low • 384-well low formats • 48-vial or 12-vial trays (any combination of plates is allowed, except for 384 Low left and 96 High right)
Max. plate/vial height:	47 mm (incl. septa or capmat)
Loop volume	1 - 5000 µL programmable
Dispenser syringe	500 µL

Vial detection	Missing vial/well plate detection by sensor
Headspace pressure	Built-in compressor, but only for vials with Septa
Injection valve switching time	Electrically < 100 ms
Needle precision	± 0.6mm
Wash solvent	Integrated wash solvent bottle
Wetted parts in flow path	PEEK, SS316 (needle only)
Injection cycle time	< 60 sec. in all injection modes for 1 injection ≤100 µL including 300 µL wash

Analytical performance

Injection modes	Full loop, partial loopfill, µL pickup, EMP
Reproducibility (valid at 1.0 cP)	RSD ≤0.3% for full loop injections RSD ≤0.5% for partial loopfill injections, injection volumes > 10 µL RSD ≤1.0% for µL pickup injections, injection volumes > 10 µL
Carryover effect	< 0.05% with programmable needle wash

Programming

Interface	Envision software with proper license
Injection methods	Full loop, partial loopfill, µL pickup, and EMP
Injection volume	0 µL - 9.999 mL (with 1 µL increments),
Max. injection volume	depending on system settings • Full loop = loop volume • Partial loopfill = ½ loop volume • µL Pick up = (loop volume - 3 x needle volume)/2 • EMP = loop volume
Max. Injections per vial/well	9
Analysis time max	9 hr, 59 min, 59 sec

Wash Programmable:	Wash between injections or Wash between vials/wells
Timed events	Programmable: 4 x AUX ON/OFF
Priority sample	Programmable

Communications

Outputs	1 programmable relay output, programmable as Inject marker (default), Auxiliary, Alarm
Inputs	2 programmable TTL inputs, programmable as Next injection input (default), Freeze input, Stop input
Serial communication port	RS232C standard

Cooling

Method	Built-in Peltier cooler (convection mode)
Range	4°C to [Ambient minus 3°C]
Temperature regulation	At 4°C set temperature, 80% relative humidity and 25°C ambient temperature , the air in sample compartment is 4°C ± 2°C (at temperature sensor)

Appendix B: Control I/O connections

The AS-700 autosampler has two I/O connections:

- RS232 connector for serial communication with the control software.
- 9-pin connector for contact closures output and TTL inputs.

The manufacturer will not accept any liability for damages directly or indirectly caused by connecting this machine to instruments which do not meet relevant safety standards.

The I/O connector contains user definable active high or active low TTL inputs and one contact closure output.

- The two inputs can be programmed as *Next Injection Input*, *Freeze Input* or *Stop Input*. The *Next Injection Input*, *Freeze Input* and *Stop Input* can be used to control the autosampler by other devices.
- The contact closure output can be programmed as *Inject Marker*, *Auxiliary* or *Alarm output*.

Table: I/O connector - Contact closure output and TTL inputs

Pin no	Description	Cable colors
1	Output - Common	RED (3-wired)
2	Output - Normally open	BLACK (3-wired)
3	Input 1	RED (4-wired)
4	Input 2	BLACK (4-wired)
5	GND	
6	Output - Normally closed	BROWN (3-wired)
7	GND	
8	GND	ORANGE (4-wired)
9	GND	BROWN (4-wired)

Contact closure output:

- Inject Marker Output (default): an Inject marker output will be generated when the injection valve switches from LOAD to INJECT.
- Status duration of the Inject Marker is the same as setting Injection marker pulse in the autosampler window. Range of the adjustment of the inject marker pulse is 0.1 - 2.0 seconds.
- Alarm Output: the Alarm Output will be activated whenever an error occurs.
- Auxiliary: the contact closure output can be used as an Auxiliary which can be programmed on a time base up to 4 times On/Off.

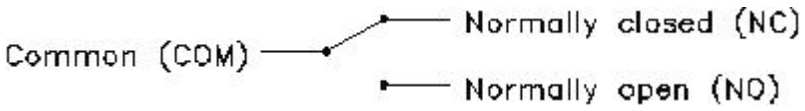

Contact closure output: Vmax = 28 Vdc / Vac , Imax = 0.25 A

TTL inputs:

- Next Injection Input (default): this input will start the next injection sequence After finishing the injection sequence the autosampler will wait for the Next Injection Input.
- Freeze input: the autosampler will freeze the analysis time for the time this input is active. If the Freeze Input is activated while the analysis time is not running, the autosampler will perform all programmed pre-injection sample handling (sample loop). But the autosampler will wait before injecting the sample until the Freeze Input is no longer active.
- Stop Input: with this input the run of the autosampler is immediately aborted.